ED610

1/3" CCD Wide Dynamic & True Day/Night
Outdoor Vandal Dome Camera

POLESTAR II

IP66

True D/N | Super Low Lux | Outdoor | IP66 Weatherproof | WDR | POWER | Vandal Resistant | 3D-NR | OSD

Features

- Provides Digital Wide Dynamic Range expansion to deliver properly exposed images despite bright light sources, deep shadows and/or unbalanced lighting in the same scene
- 560 TVL with full motionTtrue Day/Night plus color images in low light without ghosting
- Provides 3D-Noise Reduction to improve picture clarity while enabling DVRs to improve disk storage utilization
- 3 axis for wall for ceiling mounting with flexible angle viewing
- The starlight super high sensitivity of 0.0002 Lux/F1.2 is achieved through a sensitivity increase setting of up to 256x
- Easy to use OSD setup menu
- Motion detection for 4 zones
- Privacy mask function for 8 zones
- Provides digital zoom (up to 32x)
- Dual voltage (12VDC/24VAC) with line lock to AC supply
- Weatherproof IP66 rated
- Vandal resistant to withstand intentional destruction

Dimensions

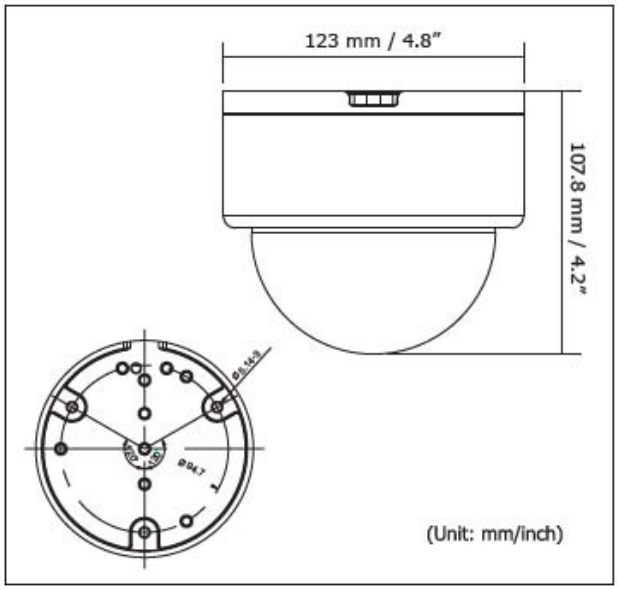

Specifications

Pickup Device	1/3" Sony Super HAD CCD II
Video Format	NTSC or PAL
Scanning System	NTSC: 525 TV lines, 60 fields/sec. PAL: 625 TV lines, 50 fields/sec.
Picture Elements	768 x 494 (NTSC) / 752 x 582 (PAL)
Horizontal Resolution	560 TVL
Sensitivity	0.0002 Lux/F=1.2 (Sens-up 256x) 0.05 Lux/F=1.2 (AGC ON)
S/N Ratio	Over 52dB (AGC off)
Electronic Shutter	1/50 (1/60)~1/100,000
Video Output	Main BNC out 1.0V p-p 75Ω, Local aim/focus test point 1.0V p-p 75Ω (cable provided)
Gamma Correction	0.45
Lens Type	Vari-focal lens, Auto Iris, 2.8-10mm, 9-22mm
Backlight Compensation	BLC, OFF, HS BLC Selectable
Auto Gain Control	Low/Middle/High Selectable
White Balance	ATW/AWB/AWC/Manual/Indoor/Outdoor Selectable
Sync. Mode	Internal/Line lock external sync.
Day/Night	Yes, (Auto,Color,B/W,EXT)
OSD menu	Yes
3DNR	On/Off switchable
Digital WDR	Outdoor, Indoor
Digital Slow Shutter	Sens-Up ~ 256x
Mirror	Off/Mirror/V-Flip/Rotate Selectable
Digital Zoom	On/Off switchable (up to 32x)
Motion Detection	Off/On for 4 Zones
Privacy Mask	Off/On for 8 Zones
Weatherproof	IP66
Vandal Resistant	Yes
Power Source	12VDC/24VAC
Power Consumption	12VDC: 3W max. / 24VAC: 3W max.
Operating Temperature	-10°C~50°C / 14°F~122°F
Humidity	20% ~ 80%
Dimensions (W x H)	123 x 107.8 mm / 4.8" x 4.2"
Weight	0.74 kg / 1.6 lbs
Certifications	CE / FCC

*Models vary in different countries. Please visit your EverFocus regional website for detailed ordering information.

*All product specifications are subject to change without notice